98

:

:

:

:

:

:

:

2

Ã ¤ # 3

2.3

2.4

2.5

3.1

3.1.1

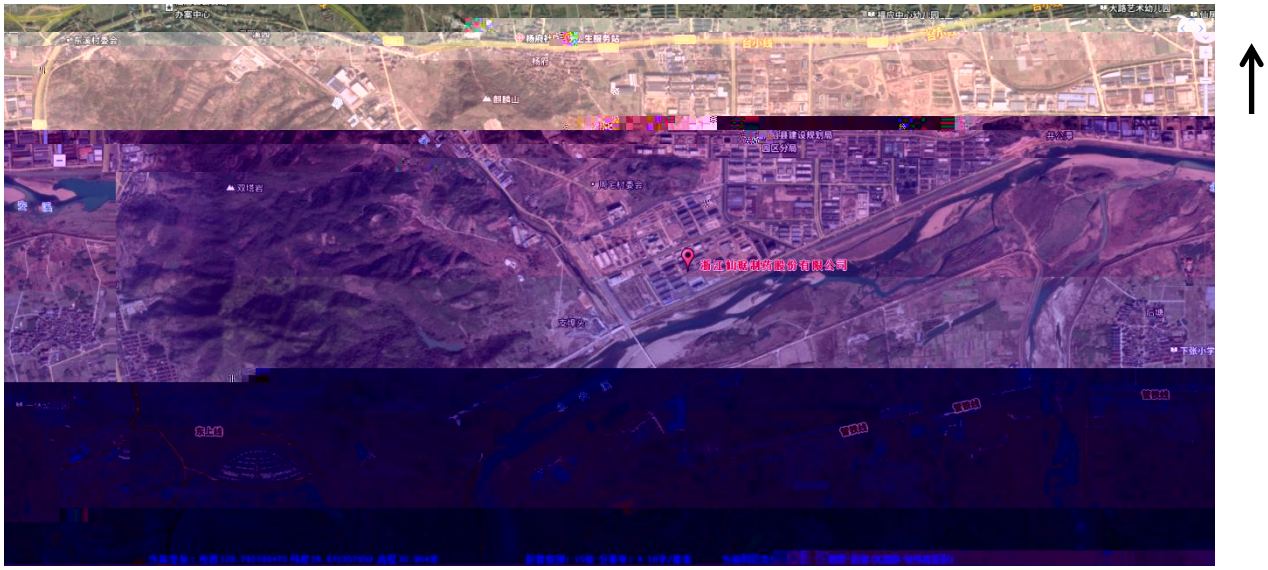

3.1-1

3.1.2

3.1-1

			m	

			m	

3.1.3

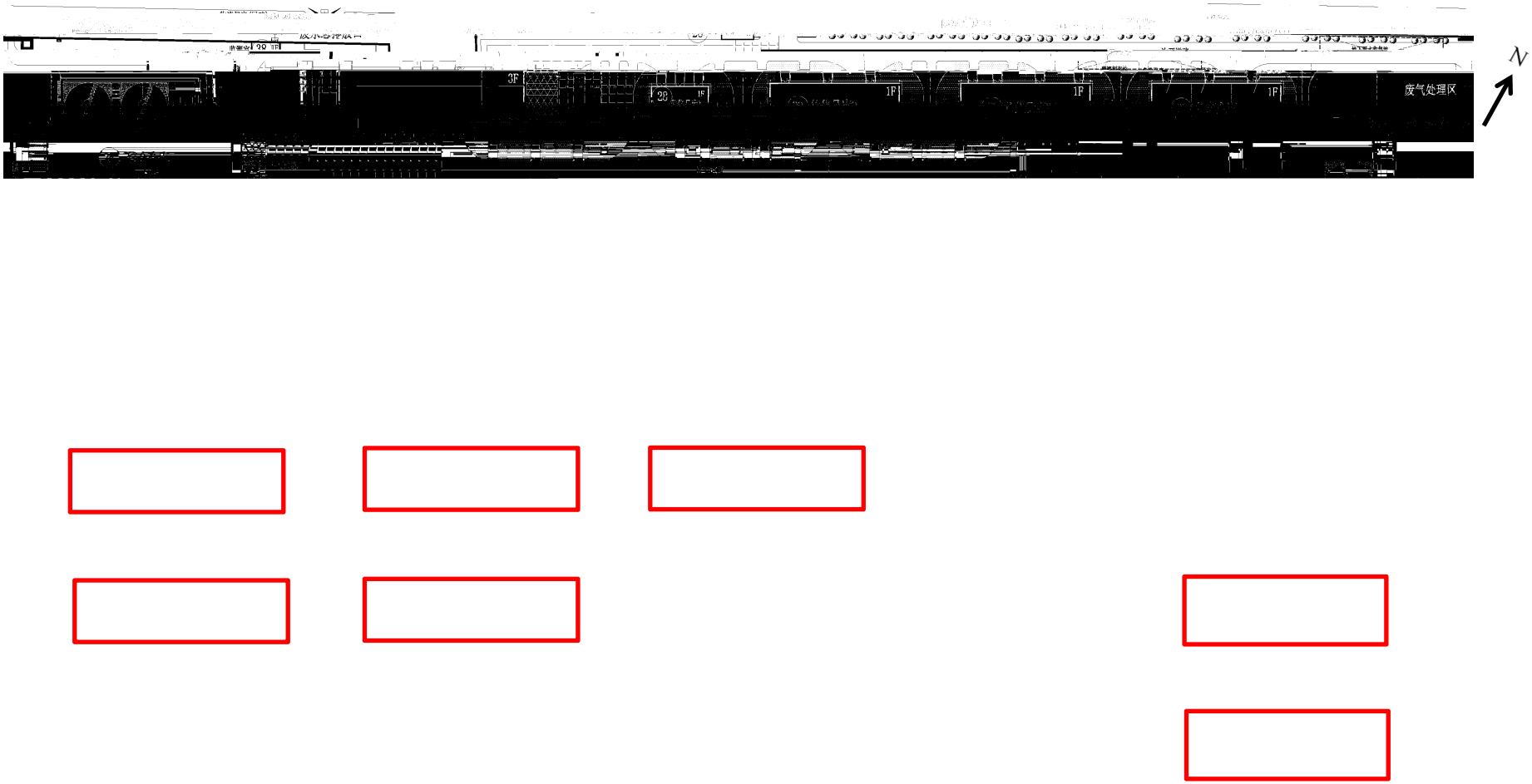

3.1-2

3.2

3.2.1

3.2.2

3-2-2

		(t/a)			

		(t/a)			

3.2-3

		t/a			

3.2.3

3.2-4

*f TM

3.2-5

/ /

3.2.4

3.2-6

					/ /			/ /	
	1 B049								
	23#								
	1 B044 A								

					/ /			/ /	

				/ /			/ /	

					/ /			/ /	

/ /
/ /

					/ /			/ /	
	10								
	17#								

					/ /			/ /	

3.2-6 **23#** **1** **B049**

10# **15** **X8**

23# **1** **B044** **1**

23# **0.5**

3.3

3.4

3.5

1

2

3

4

3.5-1

t **t**

t **kg**

			t	kg	t				t			

3.5-2

			t	kg	t				t			

t **t**

t **kg**

3” R“

5

6

7

8

9

10

11

12

13

14

15

16

17

3.5-3

-174.18

0

0 **-5475**

+15522.76

-27593.23

-4250.98

3.5-4

				-530.47	
				-8928	
				+52669.2 **-79077.1**	
				-6930	
				+52669.2 **-95465.57**	

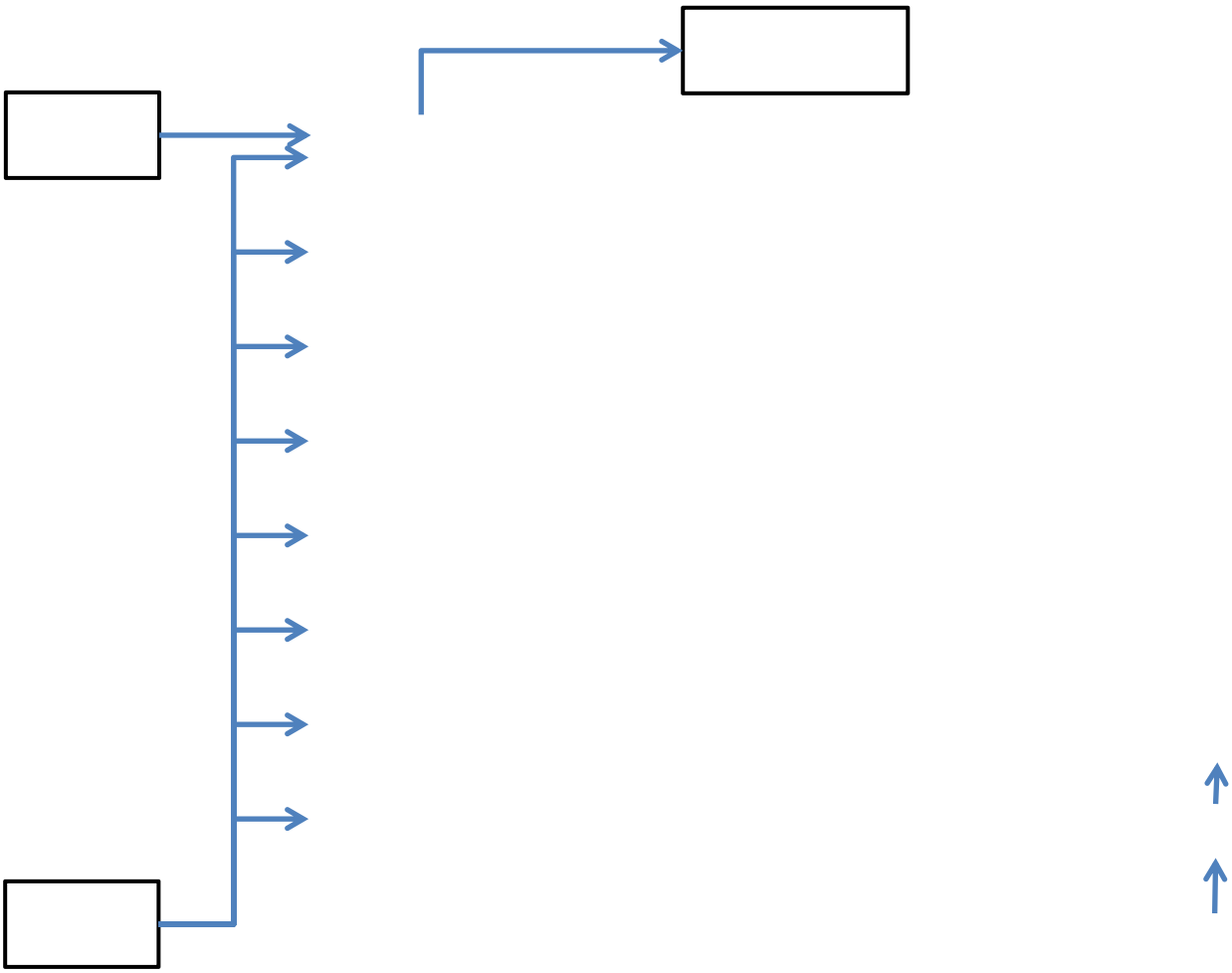

3.6

3.6-1

	2018 6				

	2018 6				
		2	**1** **2**		
		1	**1**		

	2018 6				
		2 **3** **4** **5** **6** **7**	**2** **3** **4** **5** **6**		

	2018 6				
			7		

3.6.2

3.6.3

4.1

4.1.1

4.1.2

4.1-1

4.1.4

4.1-2

B049				
X8				
B044				

4.1.5

1

2

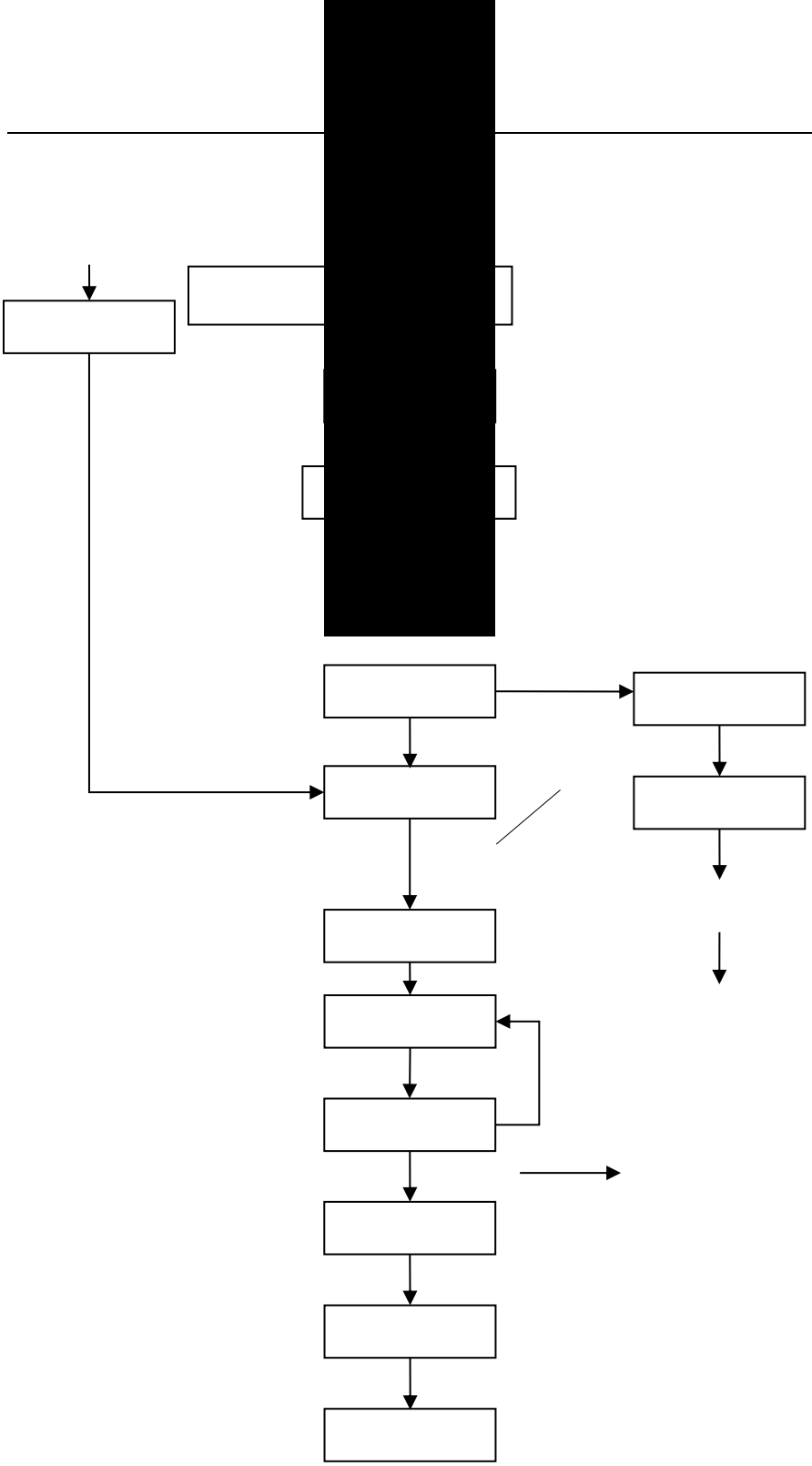

4.1-1

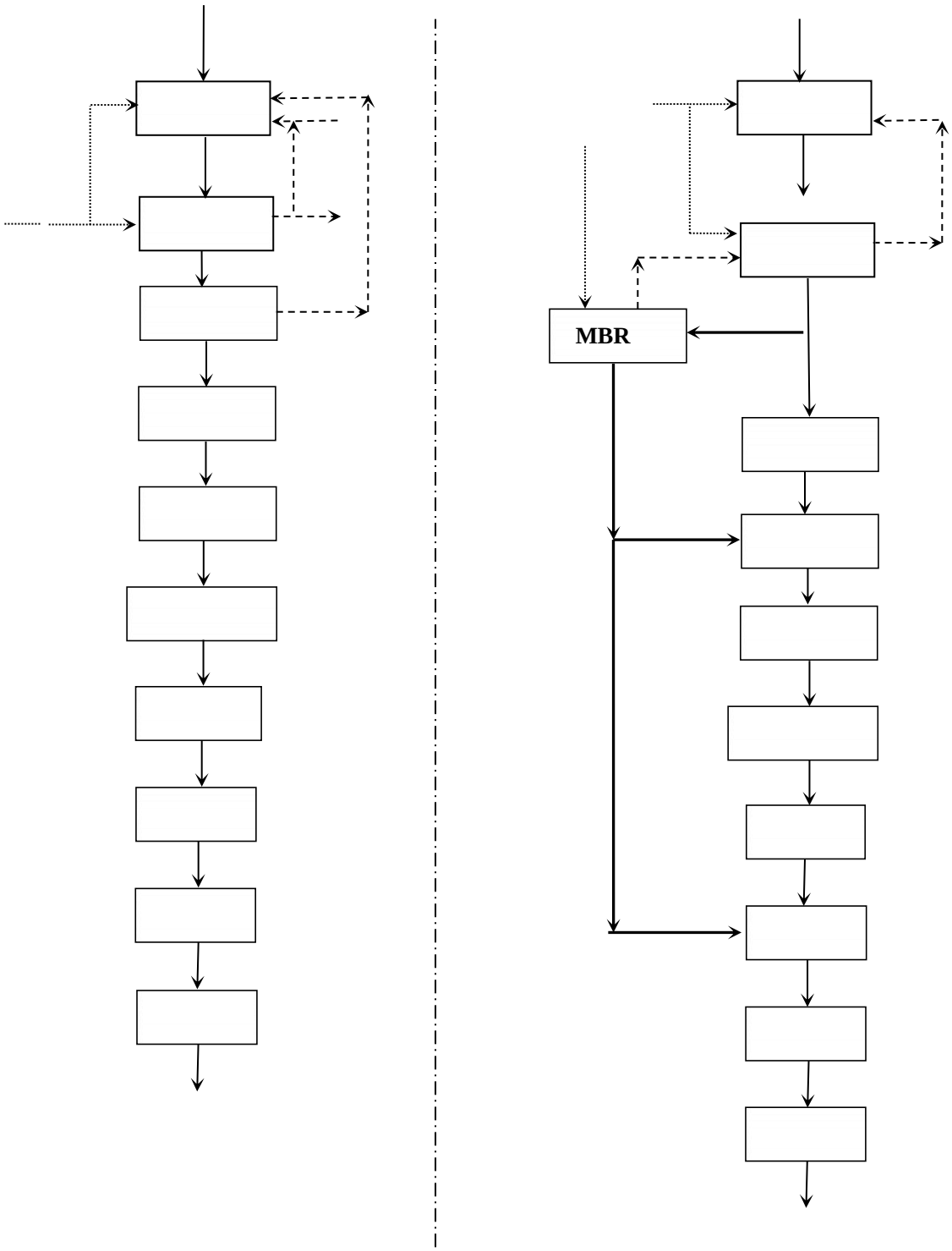

4.1-2

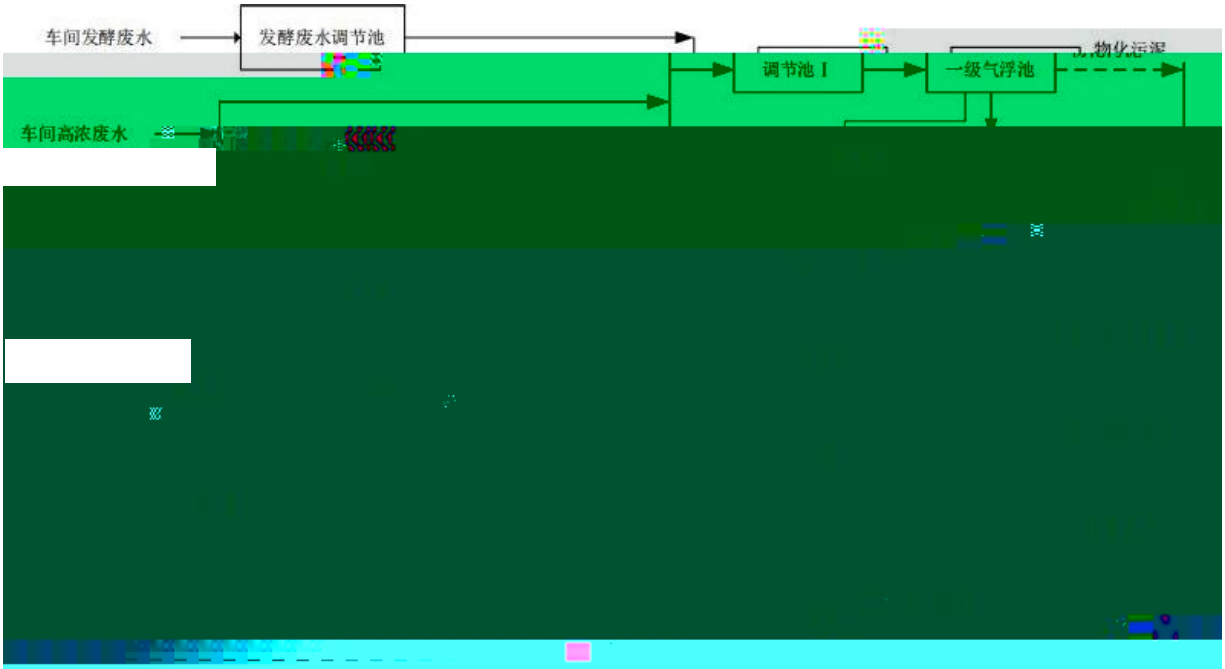

4.1-3

Ã *6

Œ

Å A

$ j

M

€ 0,€ 50 0,€ 30

LÔ 5 >L”

4.2

4.2.1

4.2.2

4.2-1

4.2.3

4.2.4

4.2-2

4.2-3

	+	+
	+	+ **#1**
		+ **#2**
	+ +	+ +

4.2.6

4.3

4.3-1

4.4

4.4.1

4.4.2

4.4.3

4.4-1

4.4.4

4.4-2

HW06 900-401-06 HW06 900-402-06 HW06 900-404-06

2021 15 HW02 271-002-02

GB18597-2023

GB18599-2020

4.4-3

HW06 900-401-06 HW06 900-402-06 HW06 900-404-06

2021 15 HW02 271-002-02

GB18597-2023

GB18599-2020

4.5

4.6

4.6.1

4.6.1.1

1

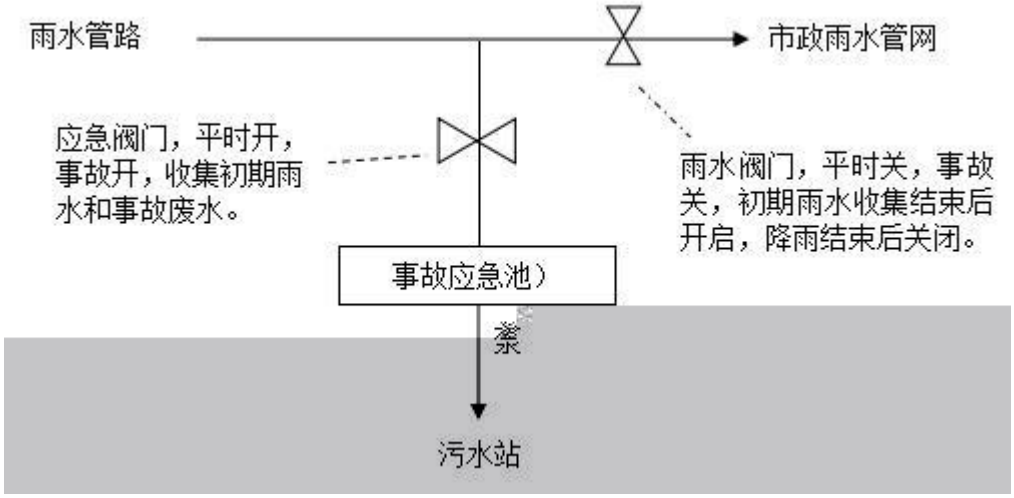
雨水管路
市政雨水管网
应急阀门，平时开，事故开，收集初期雨水和事故废水。
雨水阀门，平时关，事故关，初期雨水收集结束后开启，降雨结束后关闭。
事故应急池）
泵
污水站

4.6-1

2

4.6-1

4.6.2 LDAR

4.7“ ”

4.7.1 “ ”

4.7.2

4.7-1

4.7.3“ ”

4.7-2 “ ”

5.1

5.1.1

5.1.2

5.1.3

5.1.5

5.1.6

3.

4.

[2016]150 “ ”

5.

6.

5.2.2 **2018**

5.3

5.4

6.1

6.1

6.1-1

“*” 12 1 3 31

6.1.2

6.1-3

	mg/m^3			
	RTO			

6.1-3

	mg/m^3			
	RTO			

1,2,3- **1,2,4-** **1,3,5-**

6.1-4 VOCs

6.1-5 TVOC

6.1-6

	mg/m^3			
	RTO			

1,2,3- **1,2,4-** **1,3,5-**

6.1-7 **DB33/310005-2021**

6.1-8 **GB14554-93**

		m	kg/h	mg/m^3

6.1.3

6.1-9 **GB12348-2008**

	dB	dB

6.1.4

6.1.5

6.1-10

	t/a	t/a	t/a	kg/a	t/a	t/a	VOCs t/a
	22069	0.662	0.033	0.14	0.72	0.04	2.46
	/	13.131	0.656	1.16	21.462	1.05	26.83

6.1-11

	t/a	t/a
	1.5	1.5
	27.978	1.575

6.1-12

					“ ” t/a T3	t/a	t/a T4	T5
	t/a	t/a T1	t/a	t/a T2				

T1

3.2-1 3.2-3

T2

1

7661t/a

2

4525t/a

3

1196.2t/a

4

1794.2t/a

5

1350t/a

6

225t/a

7

225t/a

8

225t/a

9

867t/a

18068.4t/a

0.542t/a **0.027t/a**

T3 **“** **”** **9.3.2-1**

T4 = T1 + T2 - T3

T5 **433682.4t/a**

5.204t/a

7.1

★

7.1-1

COD			

3.3.1-5

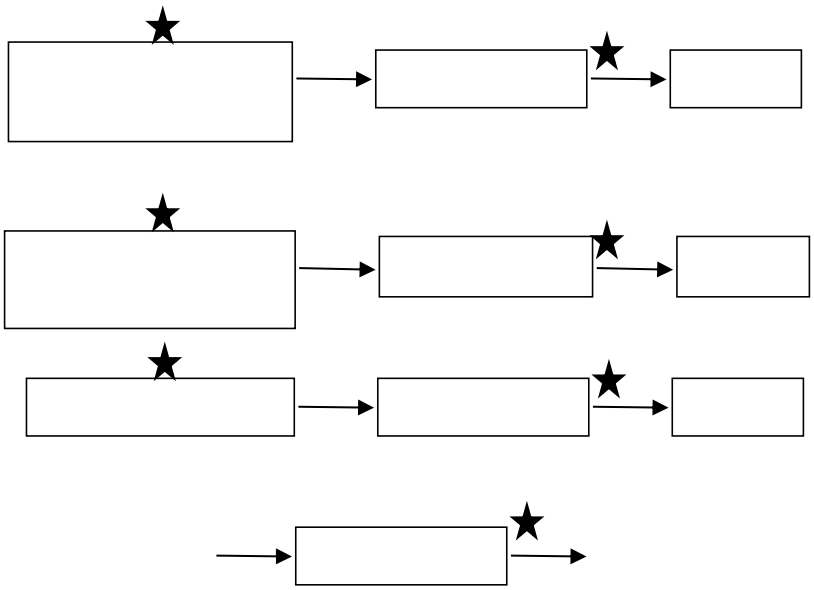

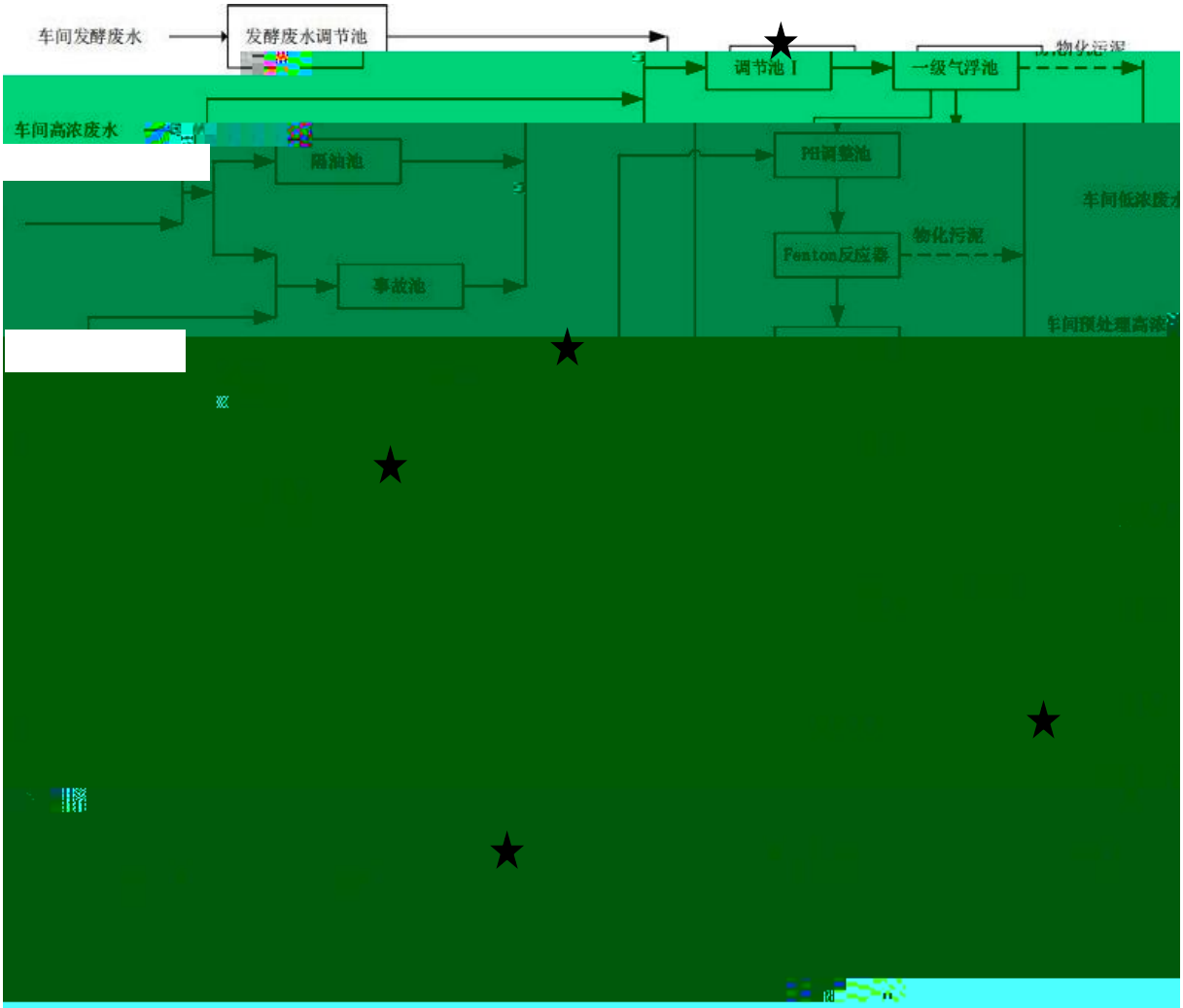
车间发酵废水
发酵废水调节池
调节池Ⅰ
一级气浮池
物化污泥
车间高浓废水
隔油池
事故池
PH调整池
Fenton反应器
物化污泥
车间低浓废水
车间预处理高浓

7.1-1

7.2

◎

7.2-1

	RTO			
	RTO			
	+			
	+			

7.2-1

	1# +			
	2# +			
	+ +			
	+ +			

7.2-2 VOCs

“ ”

VOCs

t/a t/a t/a t/a

VOCs	t/a	t/a	“ ” t/a	t/a	

DB33/310005-2021

90% VOCs

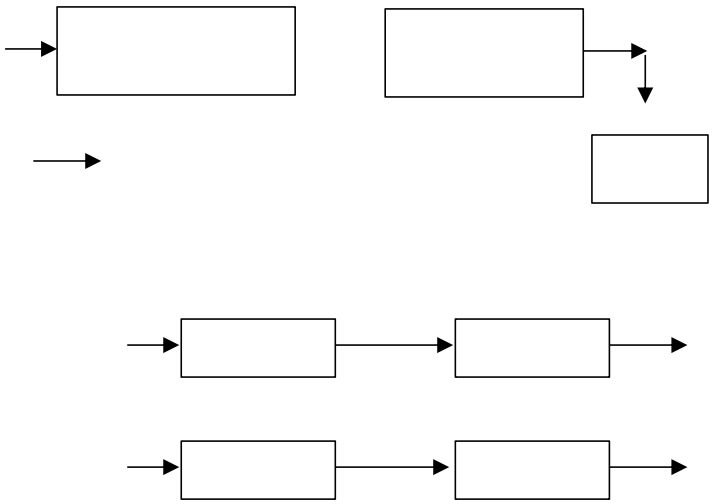

?±"rP

AÑ1Ñ

○

7.2-3

“*”

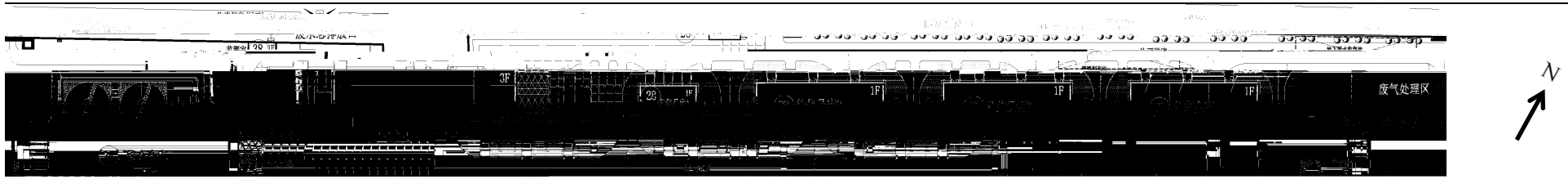

○

○

○

○

○

7.2-2

8.1

1

8.1-1

[redacted]

2

8.1-2

/

/

			/

/

/

ঠঁ

			/

			/

“*”

3

8.1-3

8.1-4

8.2

8.2-1

8.2-2

8.2-2

8.2-2

8.2-2

8.2-2

8.2-2

“NC”

8.2-3

“ND”

8.2-4

“ND”

8.2-5

8.2-6

9.1

9.1-1

	t	(kg/d)	2023 8 24		2023 8 25		2023 8 31		2023 9 1		2024 1 26		2024 2 2		2024 2 3		
			(kg/d)		(kg/d)		(kg/d)		(kg/d)		(kg/d)		(kg/d)		(kg/d)		

	t	(kg/d)	2023 8 24		2023 8 25		2023 8 31		2023 9 1		2024 1 26		2024 2 2		2024 2 3		
			(kg/d)		(kg/d)		(kg/d)		(kg/d)		(kg/d)		(kg/d)		(kg/d)		

1

2 B049 21kg 4 1 B044 17kg 3 1

3

75%

9.1-2

9.2

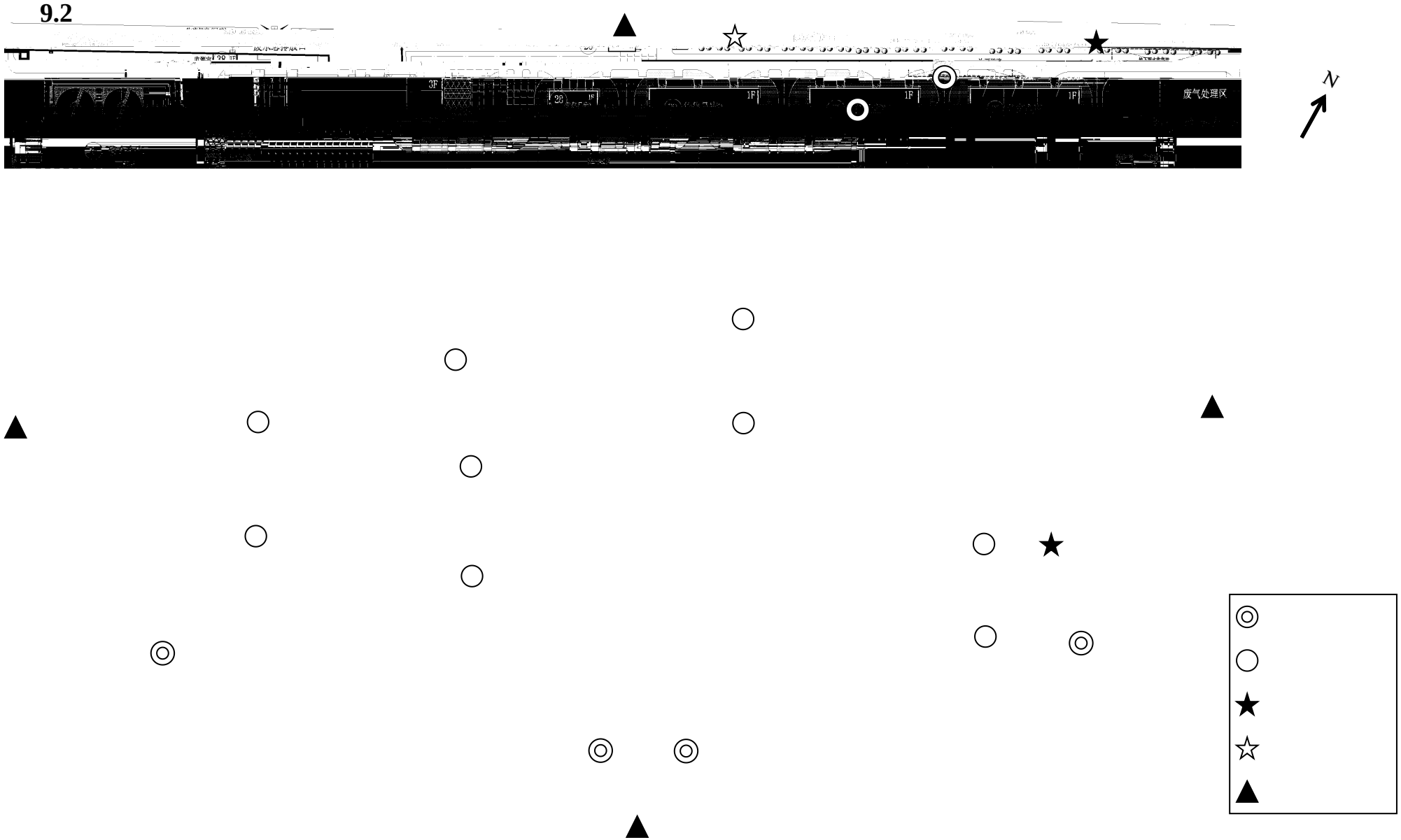

9.3

9.3-1

9.3-1

9.4

9.4.1

9.4.1.1

9.4-1

	Y_i kg	Q m^3	Q_i t/t	

	Y_i kg	Q m^3	Q_i t/t	

9.4.1.2

9.4-2

			pH ( )		(mg/L)	(mg/L)	(mg/L)	(mg/L)	(mg/L)	(mg/L)	(mg/L)	(mg/L)	(mg/L)	(mg/L)	(mg/L)	(μg/L)	(μg/L)	(μg/L)
			/	/	2.40×10^{5}	2.42×10^{5}	>6000	1.17×10^{5}	4.86×10^{3}	1.79×10^{4}	0.18	14	1.50×10^{4}	0.32	1.28	5.2	5.40×10^{4}	4.24×10^{4}
			/	/	2.38×10^{5}	2.46×10^{5}	>6000	1.13×10^{5}	4.70×10^{3}	1.81×10^{4}	0.20	16	1.32×10^{4}	0.67	0.62	1.8	8.40×10^{4}	6.36×10^{4}
			/	/	1.08×10^{4}	1.15×10^{3}	109	6.24×10^{3}	776	1.09×10^{3}	0.08	15	0.36	0.13	0.22	<1.4	<6.13	311
			/	/	1.16×10^{4}	1.18×10^{3}	87.4	6.35×10^{3}	919	1.05×10^{3}	0.11	14	0.27	0.41	0.26	<1.4	234	588
day1		%	/	/	95.5%	99.5%	>98.2%	94.7%	84.0%	93.9%	55.6%	/	99.9%	59.4%	82.8%	86.5%	99.9%	99.3%
day2		%	/	/	95.1%	99.5%	>98.5%	94.4%	80.4%	94.2%	45.0%	/	99.9%	38.8%	58.1%	61.1%	99.7%	99.1%

				9.4-3				COD						
		pH	( )		(mg/L)	(mg/L)	(mg/L)	(mg/L)	(mg/L)	(mg/L)	(mg/L)	(mg/L)	(μg/L)	(μg/L)	(μg/L)
		/	/	3.78×10^{5}	>6000	405	94.5	35	206	33.8	0.48	1.24×10^{3}	9.96×10^{6}	5.56×10^{6}
		/	/	2.40×10^{5}	>6000	363	92.1	30	192	29.4	0.26	1.39×10^{3}	5.88×10^{6}	4.79×10^{6}
		/	/	3.87×10^{4}	>6000	336	89.6	21	9.42	2.08	0.10	1.2	8.78×10^{3}	6.44×10^{3}
		/	/	2.92×10^{4}	>6000	276	88.0	12	11.0	3.46	0.27	7.5	2.51×10^{4}	2.10×10^{4}
%	day1	/	/	89.8%	/	17.0%	/	40.0%	95.4%	93.8%	/	99.9%	99.9%	99.9%
%	day2	/	/	87.8%	/	24.0%	/	60.0%	94.3%	88.2%	/	99.5%	99.6%	99.6%

9.4-4

			pH ( )		(mg/L)	(mg/L)	(mg/L)	(mg/L)
			/	/	0.174	1.98	0.033	555
			/	/	0.156	2.44	<0.004	498
			/	/	0.030	0.172	<0.004	236
			/	/	0.034	0.274	<0.004	239
			/	/	0.5	1.5	1.0	/
day1 %			/	/	82.8%	91.3%	/	57.5%
day2 %			/	/	78.2%	88.8%	/	52.0%

9.4-5

pH ( )	( )	(mg/L)	(mg/L)	(mg/L)	(mg/L)	(mg/L)	(mg/L)	(mg/L)	(mg/L)		(mg/L)	(mg/L)	(μg/L)	(μg/L)	(μg/L)	(mg/L)	(mg/L)	(mg/L)	(mg/L)
/	/	4.08×10^{4}	>6000	1.07×10^{3}	163	190	13.8	30	93.3	6	39.9	0.30	6.76×10^{4}	2.57×10^{5}	1.97×10^{5}	/	/	/	/
/	/	3.88×10^{4}	>6000	992	134	160	8.87	27	70.1	5	33.8	0.31	7.66×10^{4}	5.04×10^{5}	4.00×10^{5}	/	/	/	/
/	/	1.82×10^{3}	598	906	10.3	46.2	0.47	22	8.36	6	5.10	0.03	226	2.44×10^{3}	2.21×10^{3}	/	/	/	/

pH ( )	( )	(mg/L)	(mg/L)	(mg/L)	(mg/L)	(mg/L)	(mg/L)	(mg/L)	(mg/L)	(mg/L)	(µg/L)	(µg/L)	(µg/L)	(mg/L)	(mg/L)	(mg/L)	(mg/L)

pH ( )	( )	(mg/L)	(mg/L)	(mg/L)	(mg/L)	(mg/L)	(mg/L)	(mg/L)	(mg/L)		(mg/L)	(mg/L)	(μg/L)	(μg/L)	(μg/L)	(mg/L)	(mg/L)	(mg/L)	(mg/L)
/	/	7.08×10^{3}	3.61×10^{3}	2.65×10^{3}	338	387	3.08	76	20.2	30	31.0	0.18	1.91×10^{4}	2.20×10^{4}	1.79×10^{4}	6.65	0.038	0.004	/
/	/	7.97×10^{3}	3.12×10^{3}	2.41×10^{3}	303	347	1.91	32	21.7	6	31.0	0.22	3.31×10^{4}	4.12×10^{4}	3.10×10^{4}	5.33	0.027	0.007	/
/	/	3.53×10^{3}	1.66×10^{3}	2.12×10^{3}	227	287	10.5	106	3.11	48	18.9	0.19	2.53×10^{3}	2.67×10^{3}	2.22×10^{3}	11.6	0.031	0.019	/
/	/	4.21×10^{3}	1.40×10^{3}	2.17×10^{3}	228	269	9.91	359	2.97	425	17.4	0.24	1.84×10^{3}	1.07×10^{4}	6.83×10^{3}	11.2	0.038	0.010	/

pH ( )	( )	(mg/L)	(mg/L)	(mg/L)	(mg/L)	(mg/L)	(mg/L)	(mg/L)	(mg/L)	(mg/L)	(µg/L)	(µg/L)	(µg/L)	(mg/L)	(mg/L)	(mg/L)	(mg/L)
/	/	`	#														

			pH ( )	( )	(mg/L)	(mg/L)	(mg/L)	(mg/L)	(mg/L)	(mg/L)	(mg/L)	(mg/L)		(mg/L)	(mg/L)	(μg/L)	(μg/L)	(μg/L)	(mg/L)	(mg/L)	(mg/L)	(mg/L)
			/	/	216	25.1	1.64×10^{3}	9.38	22.1	2.34	12	0.18	6	15.1	0.08	1.4	<6.13	214	0.24	0.024	<0.004	/
			/	/	223	42.5	2.16×10^{3}	1.50	21.5	4.63	19	0.09	7	16.4	0.06	28.3	<6.13	396	0.07	0.011	<0.004	<0.004
			/	/	176	25.0	1.67×10^{3}	8.68	20.8	2.00	16	0.11	6	13.4	0.04	<1.4	<6.13	347	0.16	0.018	<0.004	<0.004
			6~9	/	480	300	/	35	120	8	120	20	60	20	5.0	500	/	8000	100	/	/	/

9.4-5

			(mg/L)
			46.8
			40.2
			180

ZTE202401132 **ZTE202401419** **12**

9.4-6

		(mg/L)	(mg/L)	(mg/L)
		1.0	1.0	1.0

9.4-7 “ A/O ”

(mg/L)	(mg/L)	(mg/L)	(mg/L)	(mg/L)	(mg/L)	(mg/L)	(mg/L)	(mg/L)	(mg/L)	(μg/L)	(μg/L)	(μg/L)	(mg/L)	(mg/L)	(mg/L)

9.4-10 “MBR ”

		(mg/L)	(mg/L)	(mg/L)	(mg/L)	(mg/L)	(mg/L)	(mg/L)	(mg/L)		(mg/L)	(mg/L)	(μg/L)	(μg/L)	(μg/L)	(mg/L)	(mg/L)	(mg/L)
day1	%	77.3%	86.0%	/	79.0%	64.7%	42.3%	92.4%	14.0%	/	/	/	/	/	/	38.0%	/	/
day2	%	79.6%	21	æ														

9.4-12

			pH ( )		(mg/L)	(mg/L)	(mg/L)	(mg/L)	(mg/L)	(mg/L)	(mg/L)
			/	/	9	0.64	0.02	12	<0.01	<0.004	<0.004
			/	/	16	0.67	0.04	11	<0.01	<0.004	<0.004
			/	/	50	/	/	/	/	/	/

9.4.1.3

9.4-13

	mg/L	mg/L	t/a	t/a	t/a
		/		433682.4	
		30		13.011	
		1.5		0.65	
		12		5.204	
		0.1		1.16×10^{-3}	

IV

GB18918-2002 A

9.4.1.4

	pH	(mg/L)	(mg/L)	mg/L	mg/L
	6~9	480	35	120	8

9.4.1.5

COD

13.011t/a **0.65t/a**

5.204t/a **1.16×10^{-3}t/a**

9.4.2

9.4.2.1

9.4-15

1# **2#** **1#** **2#**

/

9.4-16 RTO

	RTO		+RTO+	
	3#	4#	3#	4#
	30			
	/	800	/	800
mg/m³	/	10	/	10
kg/h	/	14	/	14
%	83.0%		84.4%	

9.4-16 RTO

RTO **+RTO+**

3# **4#** **3#** **4#**

30

9.4-16 RTO

	RTO		+RTO+	
	3#	4#	3#	4#
	30			
mg/m^3	/	/	/	/

9.4-16 RTO

RTO **+RTO+**

3# **4#** **3#** **4#**

30

1dd.-0

9.4-16 RTO

RTO **+RTO+**

3# **4#** **3#** **4#**

30

9.4-16 RTO

	RTO		+RTO+	
	3#	4#	3#	4#
	30			
mg/m^3	/	20	/	20
%	99.9%		99.8%	
mg/m^3	/	/	/	/
%	/		/	
mg/m^3	/	/	/	/
%	99.4%		99.0%	
mg/m^3	/	/	/	/
%	93.0%		92.3%	
mg/m^3	/	100	/	100
%	97.9%		98.3%	

RTO TVOC

9.4-16 RTO

RTO **+RTO+**

3# **4#** **3#**

9.4-16 RTO

	4#			4#		
	RTO			+RTO+		
	30					
ngTEQ/m^3	0.1					

9.4-17

		+	
		5#	**5#**
		15	
		800	**800**
mg/m^3		**10**	**10**
kg/h		**4.9**	**4.9**
mg/m^3		**5**	**5**
kg/h		**0.33**	**0.33**

9.4-17

		+	
		5#	**5#**
		15	
mg/m³		**60**	**60**
mg/m³		**20**	**20**
mg/m³		**/**	**/**
mg/m³		**40**	**40**

9.4-17

		+	
		5#	**5#**
		15	
mg/m³		/	/
mg/m³		/	/
mg/m³		/	/
mg/m³		**20**	**20**

9.4-17

			+
		5#	5#
		15	
	mg/m^3	1.0	1.0
	mg/m^3	/	/
	mg/m^3	20	20
	mg/m^3	40	40

9.4-17

			+
		5#	5#
		15	
	mg/m^3	/	/
	mg/m^3	/	/
	mg/m^3	40	40
	mg/m^3	/	/

9.4-17

		+	
		5#	**5#**
		15	
mg/m^3		**20**	**20**
mg/m^3		/	/
mg/m^3		/	/
mg/m^3		/	/
mg/m^3		**100**	**100**

TVOC

9.4-18

			+	
	6#	7#	6#	7#
		30		
	/	800	/	800
mg/m^3	/	60	/	60
%	70.6%		75.5%	

					+	
			6#	7#	6#	7#
			30			
mg/m^3			/	100	/	100
%			30.0%		92.9%	

9.4-19 **1#**

1# **+**

8# **9#** **8#** **9#**

30

/ **800** **/** **800**

mg/m^3 **/** **60** **/** **60**

% **66.1%** **65.7%**

	1# +			
	8#	9#	8#	9#
	30			
mg/m^3	/	100	/	100
%	19.0%		83.3%	

9.4-20　　　　　　　　　2#

				2#	+	
			10#	11#	10#	11#
			30			
			/	800	/	800
mg/m^3			/	60	/	60
%			67.2%		68.6%	

				2#		+
			10#	11#	10#	11#
					30	
mg/m^3			/	100	/	100
%			75.2%		42.9%	

	DA001:RTO	DA002:	DA003:	DA004:1#	DA005:2#	DA006:	(t/a)	(t/a)	(t/a)	(t/a)
									VOCs 26.83t/a 13.93t/a 12.90t/a	VOCs 25.24t/a 12.93t/a 12.31t/a
VOCs(t/a)										
(t/a)									21.462	20.847
(t/a)									1.050	1.048

1 300 24h 7200h
2 10% VOCs
3 VOCs

VOCs

VOCs

		V1 kg/h	V2 kg/h	t/a
DA001:RTO				
DA002:				
DA003:				
DA004:1#				
DA005:2#				
DA006:				

V1 kg/h **V2 kg/h** **t/a**

10% **VOCs**

VOCs

9.4-23

mg/m^3

1#				2#				3#				4#				
1	**2**	**3**	**4**	**1**	**2**	**3**	**4**	**1**	**2**	**3**	**4**	**1**	**2**	**3**	**4**	
																/
																/
																/
																/
																/
																/
																/
																/
																/

	1#					2#					3#					4#					
	1	2	3	4		1	2	3	4		1	2	3	4		1	2	3	4		
																					0.06

ND **A2230413054102C-1a** **A2230413054102C-2a** **14**

9.4-23

mg/m^3

1#	**2#**	**3 ˆ ˜ ˙**

		1#					2#					3#					4#					
		1	2	3	4		1	2	3	4		1	2	3	4		1	2	3	4		
																						/
																						/
																						/
																						/
																						/
																						/
																						/
																						/
																						/
																						/
																						/
																						/
																						/
																						/
																						/
																						/
																						/
																						/
																						/
																						/
																						/
																						/
																						/
																						/
																						/

	1#					2#					3#					4#					
	1	2	3	4		1	2	3	4		1	2	3	4		1	2	3	4		
																					/
																					/
																					/
																					/
																					/
																					1.5
																					20
																					0.06

ND **A2230413054102C-1a** **A2230413054102C-2a** **14**

9.4-23

mg/m³

	1				2				3								
	1	2	3		1	2	3		1	2	3		1	2	3		
																	/
	1				2				3								
	1	2	3		1	2	3		1	2	3		1	2	3		
																	/

9.4-24 VOCs

mg/m^3

		1	2	3		1	2	3		
										6.0

A2230413054102C-1a

14

9.4-24 VOCs

mg/m^3

		1	2	3	4		1	2	3	4	
											6.0

9.4.2.2

9.4-25 RTO

	mg/m^3
	60

9.4.2.3

“ **+RTO+** ”

MJ4‡¨'D

p Ð 0
1p Ð
1pØ•0
∀¨
pÃ

VOCs 25.24t/a 20.847t/a 1.048t/a

9.4.3

9.4.3.1

9.4-26

	2024 1 26			2024 2 3		
3	65	55	65	65	55	65

9.5

9.5-1

					kg/	kg/		t/a	t/a	

					kg/	kg/		t/a	t/a	

9.5-2

t

					t		

9.5-3

( )

¤

					( )	

					( )	

( )

					( )	

					( )	
					2181.406	**/**

9.5-4

10.1

10.2

10.2-1

10.2-1

10.2-1

10.2-1

11.1

11.2

11.3

11.4

11.1-1

12.1

12.1.1

“ +RTO+ ”

COD

12.1.2

1

2

"D"‘ (™Â Â Â Ä

VOCs 25.24t/a 20.847t/a 1.048t/a

1

2

3

4

13.011t/a 0.65t/a

5.204t/a 1.16×10^{-3}t/a

3

4

12.2

12.3

12.4

“ ”

											/		
										%			
										%			
							913300007047892221						
		(1)	(2)	(3)	(4)	(5)	(6)	(7)	“ ” (8)	(9)	(10)	(11)	(12)
								2.207			43.768		
								0.662			13.131		
								0.033			0.656		
								0.265			5.253		
								0.00014			0.00116		
								/			/		
								2.46			26.83		

								0.72			**21.462**			
								0.04			**1.05**			